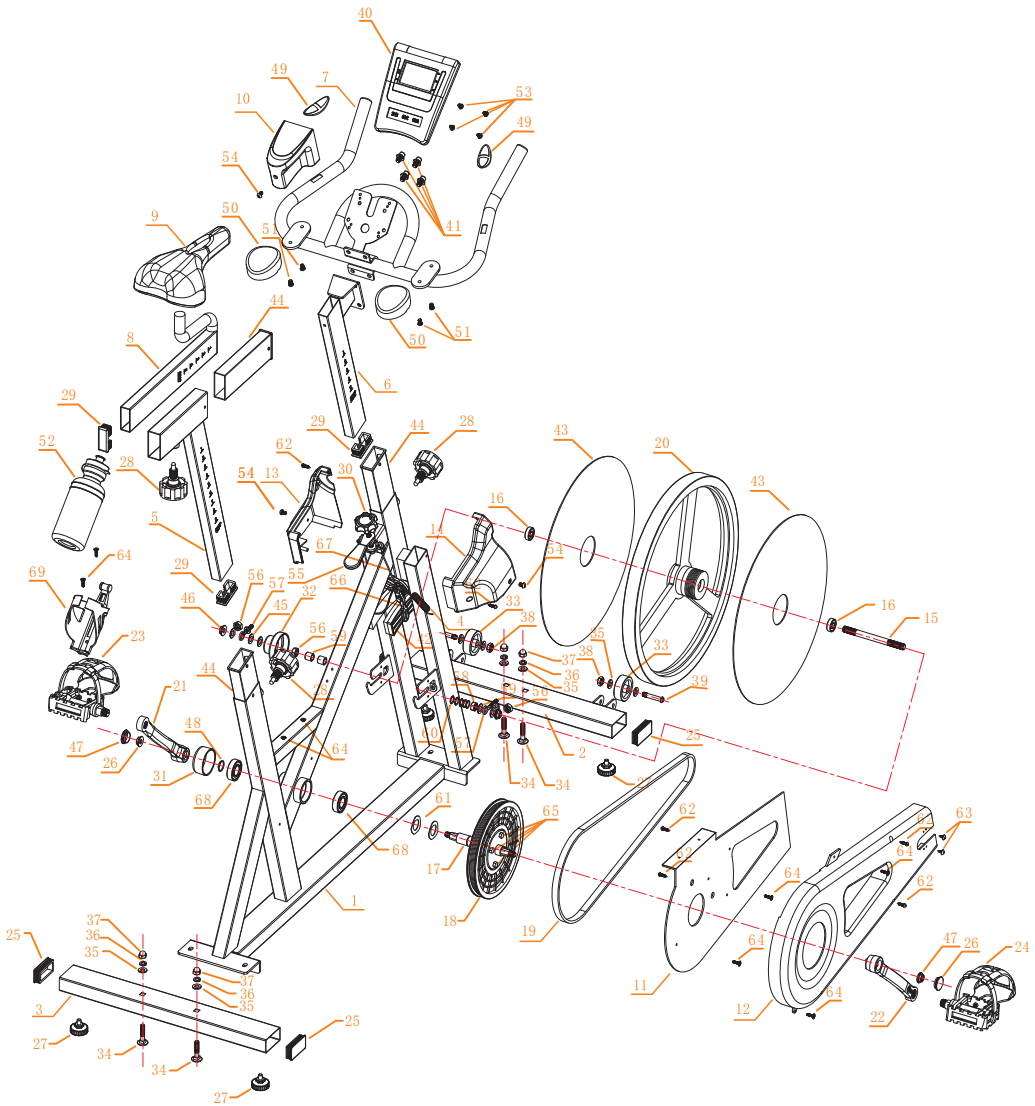3. EXPLODED DIAGRAM